JOB PORTAL

2.INTRODUCTION	**3**
2.1 PURPOSE	**3**
2.2 SCOPE	**4**
2.3 OBJECTIVES	**4**
3.FUNCTIONAL REQUIREMENTS	**5**
3.1 PRIMARY ACTORS OF THE SYSTEM	**5**
3.2 USE CASE DIAGRAM	**6**
3.2.1 ADMIN	**6**
3.2.2 JOB PROVIDER	**7**
3.2.3 JOB SEEKER	**8**
3.3 USER STORIES	**9**
3.3.1 ADMIN	**9**
3.3.2 JOB PROVIDER	**10**
3.3.3 JOB SEEKER	**11**
3.4 BPMN	**12**
4.NON FUNCTIONAL REQURIMENTS	**12**
5.TECHNIAL REQUIREMENTS	**12**
6.CONCLUSION	**13**

2.INTRODUCTION

Now a days number of job seekers are increasing ,so for easy usage we introduce a system software “job portal”. The system help the seekers to find the job with more accuracy the precise.

Traditional methods of recruitment include job fairs, universities career employment services, employee referrals, advertising in newspapers, television, etc. With the advancement in technology and the growth of internet usage, recruitment has taken place. It revolutionized the way organizations recruit and find jobs for candidates. With online jobs search apps speed up the recruitment process at every stage from job posting to receiving, applications, interview process from candidates. Job search/posting costs much less compared to the traditional way of advertising. Job search apps are effective means of outlining job vacancies, responsibilities, and qualifications to attract employers. Job seekers can search for jobs widely across companies, organizations using the app and territories they may not have learned. Further, candidates/employers can write that a review about the organization, which can help them change the way they do things. Traditional recruitment methods, such as advertising in newspapers or conducting on-site job fairs, can be expensive. Online job portals offer cost-effective alternatives, with various pricing models that cater to different budget requirements. Overall, online job portals offer convenience, efficiency, and a vast pool of opportunities for job seekers, while providing employers with a cost-effective and targeted approach to recruitment. Online job portals often provide features for companies to showcase their brand and company culture. Employers can create attractive company profiles, highlight their values, and work environment, and attract top talent by presenting themselves as desirable employers.

A job portal is an online platform that bridges the gap between job seekers and employers, streamlining recruitment through digital profiles, resume uploads, and tailored job searches. It enables employers to post vacancies and search talent, while providing candidates with 24/7 access to opportunities, resume building, and application tracking, ultimately improving hiring efficiency.This project is aimed at developing an online search Portal for the Placement Details for job seekers. The system is an online application that can be accessed throughout the organization and outside as well with proper login provided. This system can be used as an Online Job Portal for job seekers. Job Seekers logging should be able to upload their information in the form of a CV. Visitors/Company representatives logging in may also access/search any information put up by Job aspirants.

2.1 Purpose

A job portal is a website where people who need jobs can find jobs and companies looking for job seekers can find the perfect employees. It serves as a medium where job seekers can create profiles, upload resumes, and search for job openings across various industries and locations. Employers, on the other hand, can post job vacancies, review applicant profiles, and conduct the initial stages of the hiring process through the portal.So by using this system the seeker and provider can find their needs in a short time ie if it is consultancy the seeker want to go there for all the updations ,but by using this system can find it at any time.

2.2 Scope

The system can store information of all students, according to his various companies can access the information.Students can maintain their information.Notifications are sent to students about the companies.Students can access previous information about placement.The scope of a job portal involves creating a, web-based platform facilitating recruitment by connecting job seekers and employers through profile management, resume uploading, advanced job searches, and application tracking. It includes dedicated modules for users, employers, and administrators to manage job listings, applicant data, and notifications.

2.3 Objectives

It act as a platform where job seekers can browse, search, and apply for jobs based on their preferences, and recruiters can post job openings and find suitable candidates.It is to aggregate job listings from multiple sources, such as job boards, corporate career pages, and recruitment agencies, into a single, centralized, and searchable platform. By doing so, these platforms optimize the hiring process for both job seekers and employers through efficiency, speed, and automation. The system consists of three parts admin,seeker,provider.

3.FUNTIONAL REQUIREMENTS

Functional requirements of a job portal system includes three core modules: Job Seekers, Employers, and Admins. Key functions include secure user registration, advanced search/filtering for candidates, job postings, resume management, application tracking, profile management, and admin controls to manage users and content to facilitate efficient hiring.

3.1 Primary actors of the system

ADMIN

Manage job categories, industries, and remove inappropriate job postings or content,also manage the profile of seeker and provider. add new services, related to employer and job seeker, Send message to employer and job seeker for subscription, Provide rules and authentication to users.overall system is managed by the admin. Manage, activate, or deactivate both employer and job seeker accounts. Generate reports on website performance, number of vacancies, and active users.

JOB SEEKER

Job seeker can create a profile and they can also add skill. The seeker can view the profile of provider and if they want to apply for one or more jobs they can save it and add to cart and they can filter the jobs also. The seeker can chat with both the provider and admin.

- **registration/Profile Management:** Create and update user profiles, upload resumes, and set up password recovery.
- **Job Search & Filters:** Advanced search options using keywords, location, industry, and salary.
- **Application Tracking:** View application history, check job application status, and save job postings.
- **Notifications:** Receive alerts about relevant new job opportunities.

JOB PROVIDER

The provider can create and edit the profile and they can add all the details related to the job and they can view the profile of seeker and can chat with both the seeker and admin.

3.2 USER CASE DIAGRAM

The diagram that visually represents the functional requirements of a system. It illustrates the interactions between users (actors) and the system's functionalities (use cases) to define the system's scope and goals. These diagrams help clarify what a system does from a user's perspective. se case diagrams in UML model system behavior by visualizing interactions between actors (users/external systems) and system functions (use cases) to define scope, requirements, and user goals. They are primarily used during analysis to clarify high-level functionality for stakeholders, guide system design, and inform testing scenarios

3.2.1 ADMIN

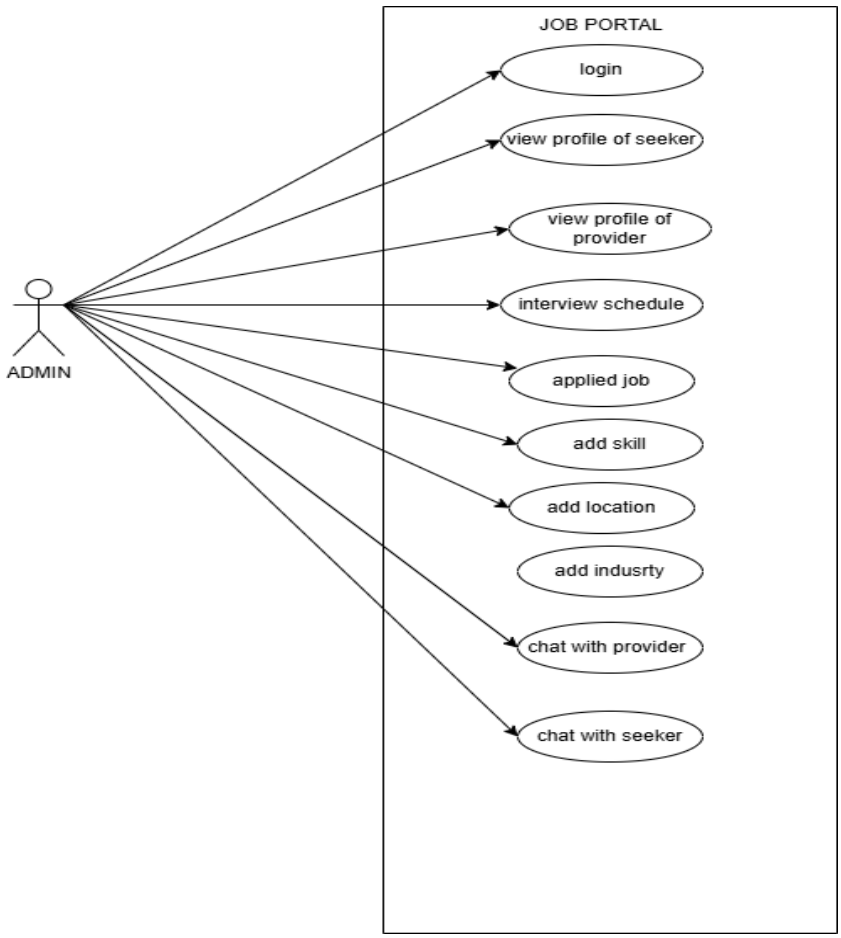

3.2.2 JOB PROVIDER

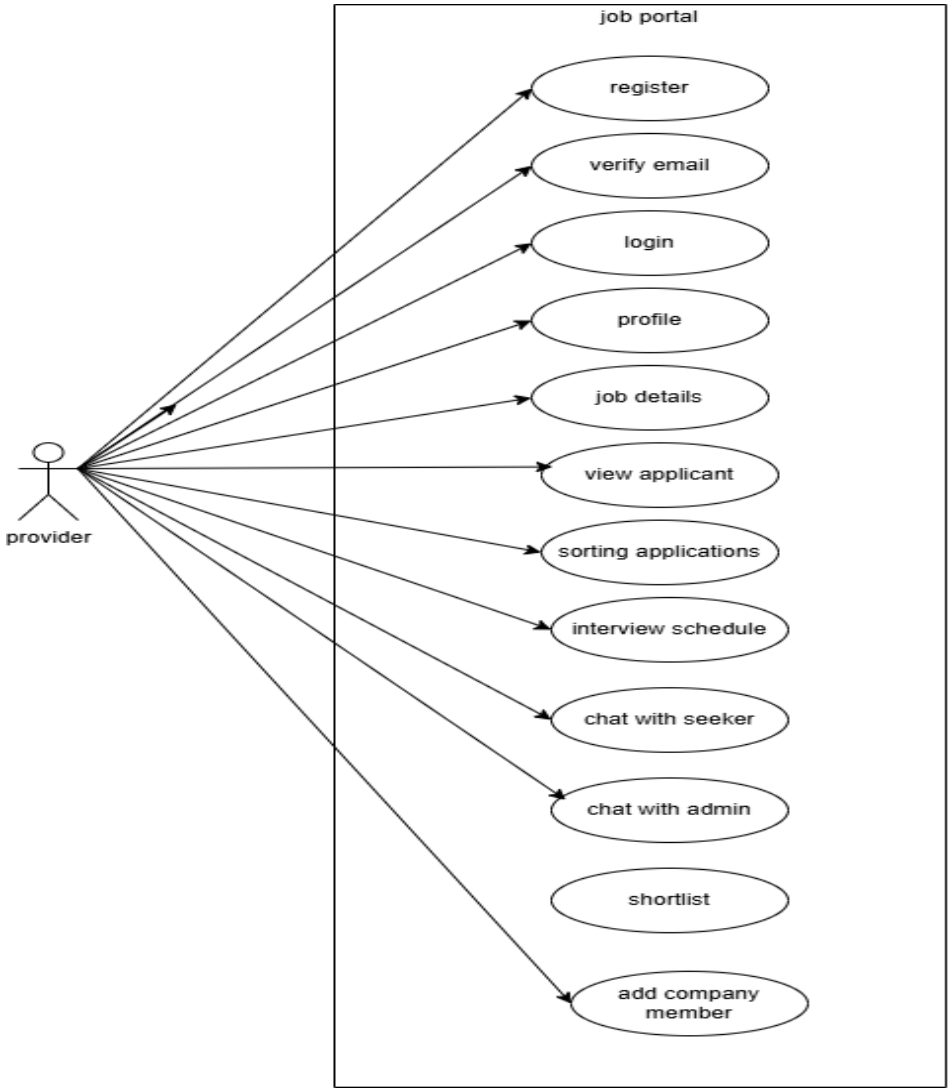

3.2.3 JOB SEEKER

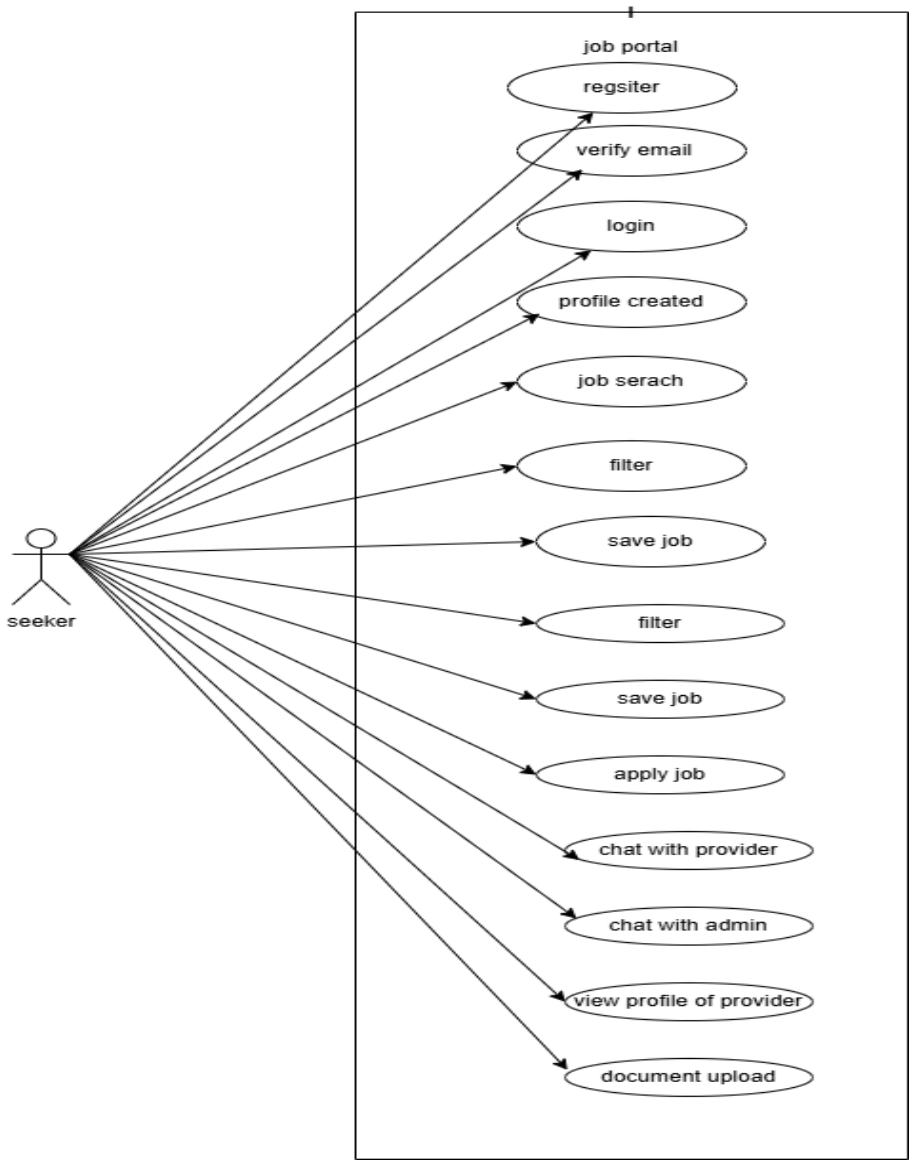

3.3 USER STORIES

Software development and product management, a user story is an informal, natural language description of one or more features of a software system. A user story is a tool used in Agile software development to capture a description of a software feature from an end-user perspective. A user story describes the type of user, what they want and why. A user story helps to create a simplified description of a requirement.

3.3.1 ADMIN

As a (Type of users)	I NEED TO (DO SOME TASK)	SO THAT I CAN GET (GET SOME RESULT)
Admin	LOGIN	To enter into the system
Admin	View profile of job seeker &provider	To access the details of job seeker and provider
Admin	Interview schedule	To view the details about the scheduled interviews
Admin	Applied job	To access the number of seeker applied for the job
Admin	Add skill	To know the skills of the seeker which will help the provider for sorting the applications
Admin	Add location	Which helps the seeker to apply the job
Admin	Chat with provider &seeker	Which help to maintain relationship with both ones and also we can ask about any other updates in the system

3.3.2 JOB PROVIDER

As a (Type of users)	I NEED TO (DO SOME TASK)	SO THAT I CAN GET (GET SOME RESULT)
Job provider	Register account	Make my data available for job seeker
Job provider	Verify email	Verifying the id for security
Job provider	login	To get into the system to view and to upload job details
Job provider	Profile created	So that the seeker can view the details
Job provider	Job details	So seeker can get the details of the vacant post
Job provider	View applicant	Once the seeker applied for the job the provider can see the profile of seeker
Job provider	Sorting of applicant	All may apply for the job,so filtering the applications based on the qualifications
Job provider	Interview schedule	Scheduling the interview
Job provider	Chat with seeker	So that provider can know more about the company
Job provider	Chat with admin	So they can get more details about the system
Job provider	shortlist	Shortlisting the selected students
Job provider	Add company member	Adding the selected students as the company member

3.3.3 JOB SEEKER

As a (Type of users)	I NEED TO (DO SOME TASK)	SO THAT I CAN GET (GET SOME RESULT)
Job seeker	Register account	Make my data available for job provider
Job seeker	Verify email	Verifying the id for security
Job seeker	login	To get into the system to view and apply for the job
Job seeker	Profile created	So that once the seeker apply for the job the provider can see the details of seeker
Job seeker	Job search	So that the seeker can find the job which is applicable of them
Job seeker	filter	They can filter the job by searching
Job seeker	Save job	If the seeker want to apply for many job,they can save the jobs in cart
Job seeker	Apply job	Once they have save the job they want to apply for the job
Job seeker	Chat with provider	So that the seeker can get an direct communication with the provider
Job seeker	Chat with admin	So that if they have any confusions and any query with the job details they can discus with admin
Job seeker	View profile of provider	So that the seeker can know more about the company and job details
Job seeker	Document upload	So that the provider can view the skill and qualification of the seeker

3.4 BUSINESS PROCESS DIAGRAM

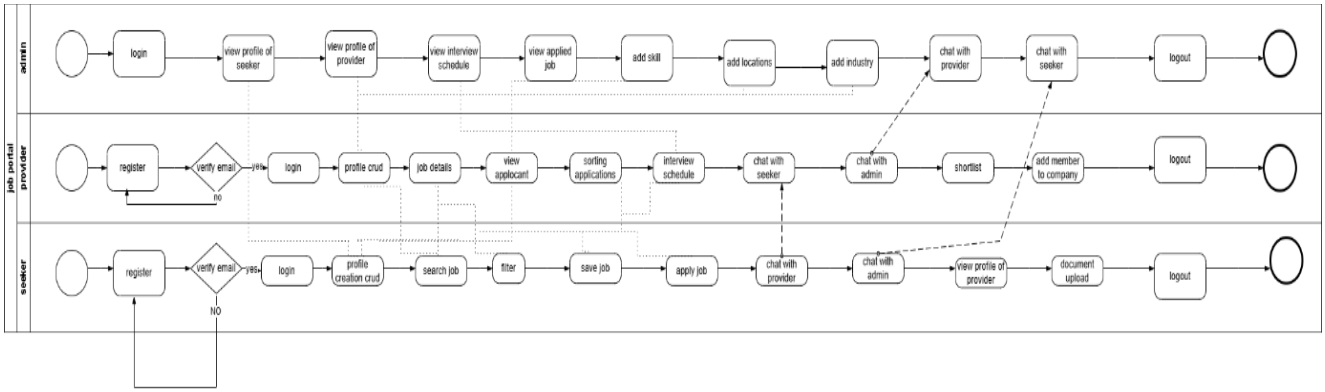

4.NON FUNCTIONAL REQUIREMENTS

System ensure high performance, security, and usability. The Job search and profile loads takes less than 2-3 seconds. The system handle high traffic without degradation. Ensure all posted jobs and applications are accurately processed and displayed without data corruption. The platform should be available 24/7 with 99.9% uptime to prevent disruption of job applications. The system is able to scale up to handle increasing numbers of users, employers, and job listings without architectural redesign.

5.TECHNICAL REQUIREMNTS

PROCESSOR	**Intel(R) Core(TM) i5**
MEMORY	**477 GB**
OS	**WINDOWS 11**
DATABASE	**MY SQL**
IDE	**ECLIPSE**

6. CONCLUSION

This Job Portal effectively bridges the gap between job seekers and employers by offering a smart, simple, and interactive platform. It reduces the manual effort involved in recruitment and job searching, making the process faster and user-friendly. Job portals offer career resources and advice to job seekers. This can include resume writing tips, interview preparation advice, and information on industry trends. Taking advantage of these resources can help you improve your job search strategy and increase your chances of landing your dream job.